H5A FISHEYE CAMERA

8 MP 12 MP

The Avigilon H5A Fisheye Camera is a cost-effective and easy-to-install solution that provides 360° panoramic views of large areas from a single vantage point, bringing superior situational awareness without any blind spots. Facilities such as schools, retailers, offices, hospitals and manufacturing plants can leverage the camera's high-resolution video to monitor processes and optimize operational efficiencies, along with its analytics and AI capabilities to proactively detect critical events and enhance the productivity of security teams.

FEATURES

360° PANORAMIC VIEWS
Provides 360° coverage from a single vantage point to help lower overall video security deployment costs.

H.264 AND H.265 WITH HDSM SMARTCODEC™ TECHNOLOGY
Optimizes compression levels for regions in a scene to help maximize bandwidth savings and keep internet connectivity costs down.

LOW-PROFILE & EASY-TO-INSTALL DESIGN
Offers unobtrusive monitoring with a paintable front plate[1] that can be customized to fit in with interior aesthetics, backed by an easy installation.

FIPS 140-2 COMPLIANT
Brings increased data security with FIPS-compliant cryptography enabled on cameras[2].

ONVIF® COMPLIANT
ONVIF Profile S, T and G compliance allows easy integration with existing ONVIF infrastructures.

NEXT-GENERATION VIDEO ANALYTICS
Detects more people with greater accuracy, even in crowded scenes, to support faster responses.

WATER & IMPACT RATED[3]
IP66/67 rating for water resistance and IK10 impact rating for vandal resistance.

WIDE DYNAMIC RANGE
Captures details in scenes with both very bright and very dark areas.

ADAPTIVE IR TECHNOLOGY[3]
Provides optimal brightness in scenes with low-light for high-resolution image detail.

AUDIO RECORDING CAPABILITIES
Built-in microphone offers an optional audio recording capability for additional evidentiary detail.

ONVIF is a trademark of Onvif, Inc.

[1] Available on in-ceiling mount only.

[2] Optional purchase of FIPS Level 1 camera license or CRYPTR microSD hardware-based encryption and key management for FIPS Level 3 support and certification.

[3] Available on surface mount only.

MOTOROLA SOLUTIONS

avigilon™

SPECIFICATIONS

IMAGE PERFORMANCE		8.0 MP	12.0 MP
Image Sensor		1/1.8" progressive scan CMOS	1/2.3" progressive scan CMOS
Active Pixels (H x V)		2048 x 2048	3008 x 3008
Imaging Area (H x V)		4.096 mm x 4.096 mm	4.662 mm x 4.662 mm
Warped 360° Video Streaming Resolutions	Primary Stream	2048 x 2048	3008 x 3008
	Secondary Stream	512 x 512; 384 x 384	512 x 512; 384 x 384
	Tertiary Stream	320 x 320	320 x 320
Dewarped Video Streaming Resolutions	Primary Stream	180° x 2 (2304 x 928); 120° x 3 (1536 x 928); 90° x 4 (1152 x 928)	180° x 2 (3072 x 1232); 120° x 3 (2048 x 1232); 90° x 4 (1536 x 1232)
	Secondary Stream	180° x 2 (576 x 232); 120° x 3 (384 x 232); 90° x 4 (288 x 232)	180° x 2 (768 x 304); 120° x 3 (512 x 304); 90° x 4 (384 x 304)
Horizontal Angle of View (HFOV)		180°	
Max Image Rate		(50 Hz/60 Hz): 25 fps/30 fps	
Dynamic Range	WDR Off:	Up to 83 dB	
	WDR On:	Up to 120 dB	
Camera Operating Mode		Full feature or Dewarped video mode (Analytics disabled in Dewarped video mode)	Full feature, High framerate, or Dewarped video mode (Analytics disabled in High framerate and Dewarped video modes)
Bandwidth Management		HDSM SmartCodec technology; Idle scene mode	
3D Noise Reduction Filter		Yes	

LENS AND IR ILLUMINATION		8.0 MP	12.0 MP
Lens		1.4 mm	1.6 mm
IR Illumination Max Distance (high power 850 nm LEDs)		17 m (55 ft) max distance at 0 lux	12 m (39 ft) max distance at 0 lux
Minimum Illumination	With IR	0 lux	0 lux
	Without IR	0.10 lux in monochrome mode; 0.20 lux in color mode	0.19 lux in monochrome mode; 0.38 lux in color mode
Horizontal Angle of View (HFOV)		180°	
Field of View		360°	
Max Aperture		F2.0	
Control		Fixed iris	

IMAGE CONTROL	
Image Compression Method	H.264 HDSM SmartCodec, H.265 HDSM SmartCodec, Motion JPEG
Streaming	Multi-stream H.264, Multi-stream H.265, Motion JPEG
Motion Detection	Pixel motion and classified object detection
Tamper Detection	Yes
Electronic Shutter Control	Automatic, Manual (1/6 to 1/8000 sec)
Iris Control	Fixed
Day/Night Control	Automatic, Manual
Flicker Control	60 Hz, 50 Hz
White Balance	Automatic, Manual
Backlight Compensation	Adjustable
Privacy Zones	Up to 64 zones

NETWORK	
Network	100BASE-TX, RJ45 Connector, CAT5e Cabling
ONVIF	ONVIF compliance Profile S, Profile T, and Profile G (www.onvif.org)
Security	Password protection, HTTPS encryption, digest authentication, WS authentication, user access log, 802.1x port based authentication, FIPS 140-2 L1 (with optional camera license), FIPS 140-2 L3 (with optional accessory)
Protocols	IPv6, IPv4, HTTP, HTTPS, SOAP, DNS, NTP, RTSP, RTCP, RTP, TCP, UDP, IGMP, ICMP, DHCP, Zeroconf, ARP, HSTS
Streaming Protocols	RTP/UDP, RTP/UDP multicast, RTP/RTSP/TCP, RTP/RTSP/HTTP/TCP, RTP/RTSP/HTTPS/TCP, HTTP
Device Management Protocols	SNMP v2c, SNMP v3

PERIPHERALS	
Onboard Storage	2 x microSD/microSDHC/microSDXC slots – video speed class card required. Class V10 or better recommended. Currently one of the two SD card slots is available for onboard storage.

AUXILIARY I/O	
Audio Compression Method	Opus, G.711 PCM 8 kHz
Audio Input/Output	Line level I/O and built-in microphone (can be enabled)
External I/O Terminals	Alarm In, Alarm Out

MECHANICAL		SURFACE MOUNT	IN-CEILING MOUNT
Dimensions (LxWxH)	Camera	145.5 mm x 145.5 mm x 62 mm; 5.72″ x 5.72″ x 2.44″	200.6 mm x 200.6 mm x 14.2 mm; 7.9″ x 7.9″ x 0.56″
	With Mounting Plate	145.5 mm x 145.5 mm x 62 mm; 5.72″ x 5.72″ x 2.44″	N/A
	With NPT Adapter	158 mm x 158 mm x 103 mm; 6.2″ x 6.2″ x 4.1″	N/A
Weight	Camera	0.52 kg (1.15 lbs)	0.595 kg (1.31 lbs)
	With Mounting Plate	0.605 kg (1.33 lbs)	N/A
	With NPT Adapter	0.838 kg (1.83 lbs)	N/A
Max. Ceiling Thickness		N/A	31.75 mm; 1.25"
Dome Bubble		Polycarbonate, clear	N/A
Body		Aluminum	Polycarbonate
Housing		Aluminum	Polycarbonate
Finish		Cast, powder coated, close to RAL9002	Plastic, injection molded, close to RAL9002

ELECTRICAL	SURFACE MOUNT	IN-CEILING MOUNT
Power Consumption	With IR: 26 W Without IR: 11 W	11 W
Power Source	VDC: 12 V +/-10%, 26 W min PoE: IEEE 802.3af Class 3 PoE+: IEEE 802.3at Class 4	VDC: 12 V +/-10%, 11 W min PoE: IEEE 802.3af Class 3
Power Connector	2-pin terminal block	
RTC Battery Backup	3V manganese lithium	
Memory	2 GB RAM, 512 MB Flash	

ENVIRONMENTAL	SURFACE MOUNT	IN-CEILING MOUNT
Operating Temperature	-40 °C to +60 °C (-40 °F to 140 °F)	-10 °C to +60 °C (14 °F to 140 °F)
IR Illuminator Behavior	IR illuminator will turn off if the temperature is 55 °C (131 °F) or higher. The illuminator will operate at 75% power if the temperature is between 27 °C (80 °F) and 39 °C (102 °F) and will operate at 40% power if the temperature is between 39 °C (102 °F) and 55 °C (131 °F). Hysteresis: 2 °C (3.6 °F).	N/A
Storage Temperature	-10 °C to +70 °C (14 °F to 158 °F)	
Humidity	0 - 95% non-condensing	

CERTIFICATIONS	SURFACE MOUNT	IN-CEILING MOUNT
Certifications/Directives	UL, cUL, CE, ROHS, RCM, EAC, UKCA, KC, BIS, NOM	

CERTIFICATIONS	SURFACE MOUNT	IN-CEILING MOUNT
Safety	UL 62368-1, CSA 62368-1, IEC/EN 62368-1, IEC 62471	
Environmental	IK10 Impact Rating, IP66 and IP67 Weather Rating	IP5X Ingress Rating
Electromagnetic Emissions	FCC Part 15 Subpart B Class B, IC ICES-003 Class B, EN 55032 Class B, EN 61000-6-3, EN 61000-3-2, EN 61000-3-3	
Electromagnetic Immunity	EN 55035, EN 61000-6-1	

ANALYTICS SPECIFICATIONS

SUPPORTED ANALYTICS EVENTS[1]	
Objects in Area	The event is triggered when the selected object type moves into the region of interest.
Object Loitering	The event is triggered when the selected object type moves into the region of interest and then stays for an extended amount of time.
Objects Crossing Beam	The event is triggered when the specified number of objects have crossed the directional beam that is configured over the camera's field of view. The beam can be unidirectional or bidirectional.
Object Appears or Enters Area	The event is triggered by each object that enters the region of interest. This event can be used to count objects.
Object Not Present in Area	The event is triggered when no objects are present in the region of interest.
Objects Enter Area	The event is triggered when the specified number of objects have entered the region of interest.
Objects Leave Area	The event is triggered when the specified number of objects have left the region of interest.
Object Stops in Area	The event is triggered when an object moves into a region of interest and then stops moving for the specified threshold time.
Direction Violated	The event is triggered when an object moves in the prohibited direction of travel.
Tamper Detection	The event is triggered when the scene unexpectedly changes.

SUPPORTED CLASSIFIED OBJECT TYPES[1]	
Object Types	Person

[1] Analytics are supported when the camera is installed in the ceiling-mounted orientation mode. There is an analytics blind spot in the middle 20% of the fisheye field of view. Objects will be detected moving in and out of the blind spot, but will not be detected when they are inside the blind spot.

AVIGILON CONTROL CENTER (ACC) VERSIONS SUPPORTED FEATURES	
ACC Version 6.14.24 or higher	H.265 supported. Fisheye dewarping is not supported on ACC versions earlier than 6.14.24. Analytics are only supported on ACC 7 systems.
ACC Version 7.12.4 or higher	All supported analytic events with people as classified objects. H.265 supported. Fisheye dewarping is not supported on ACC versions earlier than 7.12.2.

OUTLINE DIMENSIONS

IN-CEILING MOUNT CAMERA

(H5A-FE-DC)

[X.X]	INCHES
X	MM

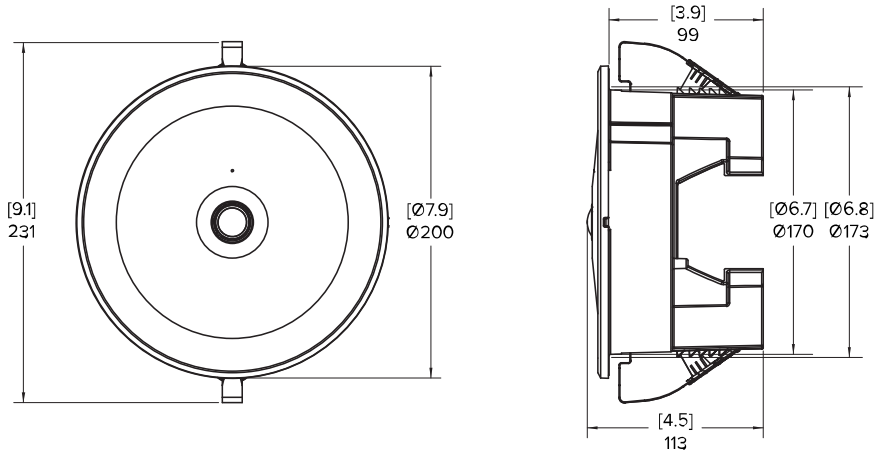

SURFACE MOUNT CAMERA

(H5A-FE-DO WITH MOUNTING PLATE)

[X.X]	INCHES
X	MM

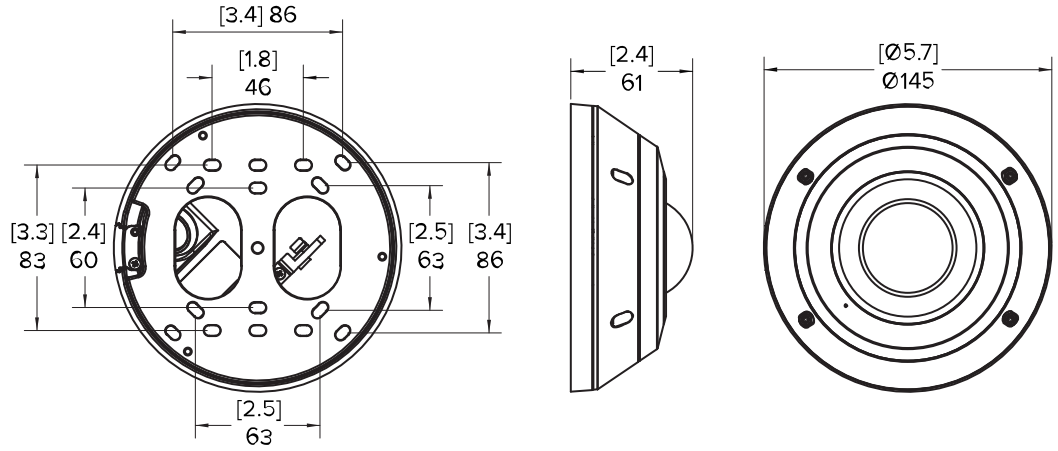

(H5A-FE-DO WITHOUT MOUNTING PLATE)

[X.X]	INCHES
X	MM

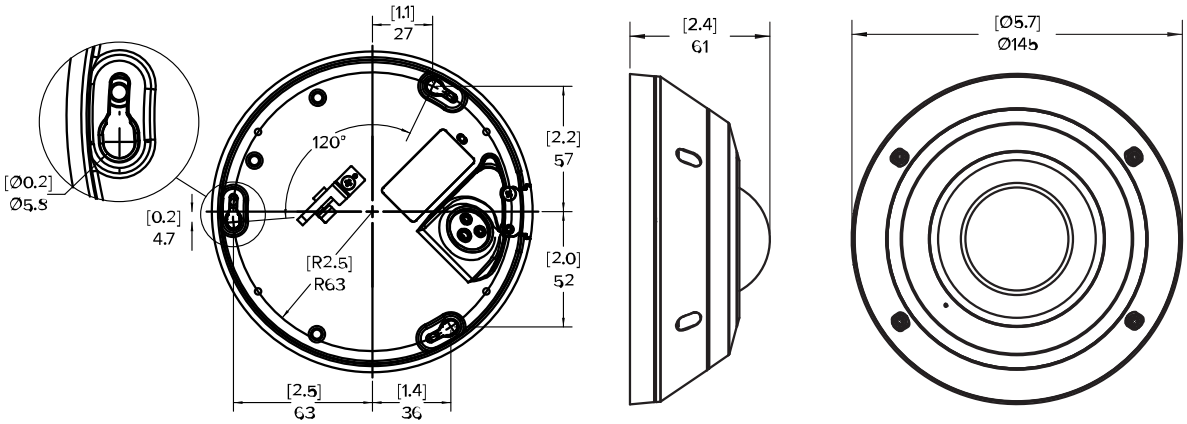

PENDANT MOUNT CAMERA

(H5A-FE-DO WITH H5A-FE-MT-NPTA1 PENDANT ADAPTER)

[X.X]	INCHES
X	MM

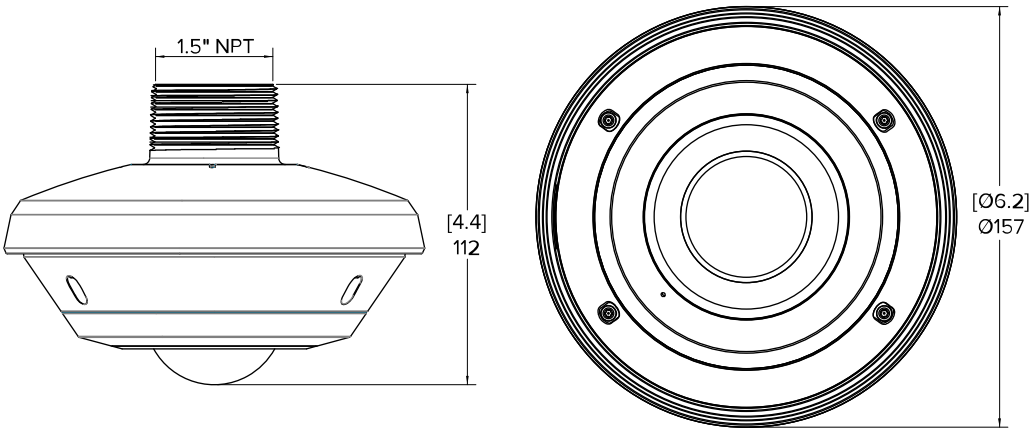

ORDERING INFORMATION

SURFACE MOUNT CAMERA

	MP	WDR	ANALYTICS[1]	LENS	IR	IP66/IP67	HDSM SMARTCODEC	LIGHTCATCHER TECHNOLOGY
8.0C-H5A-FE-DO1	8.0	✓	✓	Fisheye 1.4 mm		✓	✓	✓
8.0C-H5A-FE-DO1-IR	8.0	✓	✓	Fisheye 1.4 mm	✓	✓	✓	✓
12.0W-H5A-FE-DO1	12.0	✓	✓	Fisheye 1.6 mm		✓	✓	
12.0W-H5A-FE-DO1-IR	12.0	✓	✓	Fisheye 1.6 mm	✓	✓	✓	

[1] Analytics are supported when the camera is installed in the ceiling-mounted orientation mode.

IN-CEILING MOUNT CAMERA

	MP	WDR	ANALYTICS[2]	LENS	IR	IP66/IP67	HDSM SMARTCODEC	LIGHTCATCHER TECHNOLOGY
8.0C-H5A-FE-DC1	8.0	✓	✓	Fisheye 1.4 mm			✓	✓
12.0W-H5A-FE-DC1	12.0	✓	✓	Fisheye 1.6 mm			✓	

[2] Analytics are supported when the camera is installed in the ceiling-mounted orientation mode.

OPTIONAL CAMERA LICENSES AND ACCESSORIES

H5A-FE-MT-NPTA1	NPT adapter for the H5A Fisheye surface mount camera
CM-MT-WALL1	Pendant wall mount, compatible with H5A-FE-MT-NPTA1
H4-MT-CRNR1	Aluminum corner mounting bracket, compatible with CM-MT-WALL1
H5A-FE-DC-CPNL1	Metal ceiling panel to reinforce the existing ceiling tile in suspended ceiling installations
H5A-FE-DD-CLER1	Package of 3 dome replacement parts for H5A fisheye surface mount camera
CAM-FIPS	Camera license to enable FIPS Level 1 cryptographic mode on any H5A camera
CAM-FIPS-CRYPTR-L3	MSI CRYPTR SD with camera license to enable FIPS Level 3 cryptographic mode on H5A cameras[1]

[1] Excludes H5A Explosion-Protected camera line.

SUPPORT

Learn more and find additional documentation at avigilon.com or email sales@avigilon.com for specific product support.

MOTOROLA SOLUTIONS

avigilon

Nov 2021 | [[[Undefined variable Documents.Document ID]]] | Rev 3

© 2021, Motorola Solutions, Inc. All rights reserved. MOTOROLA, MOTO, MOTOROLA SOLUTIONS, and the Stylized M Logo are trademarks or registered trademarks of Motorola Trademark Holdings, LLC and are used under license. AVIGILON, the AVIGILON logo, AVIGILON CONTROL CENTER, ACC, HDSM SmartCodec and LIGHTCATCHER are trademarks of Avigilon Corporation. The absence of the symbols ™ and ® in proximity to each trademark in this document or at all is not a disclaimer of ownership of the related trademark. All other trademarks are the property of their respective owners.